#IDUGDb2

Db2 Basics: Monitoring and Troubleshooting Db2

Ember Crooks

Session code: B01

Db2

Agenda

- Db2 Documentation
- Error Messages
- Db2 Diagnostic Log
- Overview of Monitoring Tools:
  - db2top
  - ~~dsmtop~~
  - dmctop
  - monreport Module
  - mon_get Table Functions and Views

Troubleshooting Methodology

Take a Systemic Approach

Ember's Foundations for Troubleshooting

- Don't point fingers
- Assume that the problem is within your control
- Help others by finding clues
- Look in the common places first
- Ask extensive questions
- Ask for help

Methodical Troubleshooting

1. Prepare documentation and practice investigation ahead of time
2. Define the symptoms thoroughly – ASK QUESTIONS
3. Compile information from the environment
4. Search the web and IBM Knowledge Center
5. Form one or more hypotheses based on the details compiled
6. Test your hypotheses one at a time

Don’t :

- Panic
- Run code or commands from searches that you don’t understand
- Blindly run recommendations from IBM support without asking questions
- Change a lot of things at one time
- Leave changes that did not work in place

Extra Scrutiny for Performance Problems

- "The Database Is Slow"
  - How do you know it's the database?
  - How do you know it's slow?
  - Can you show me the metrics from when it wasn't slow?
  - Can you show me metrics from now that are slower than your baseline?
  - Has anything changed?
    - ANY code change, no matter how small
    - Usage patterns (Sales, time of month, time of year)
    - Other workloads on the database
    - Data

Bottlenecks

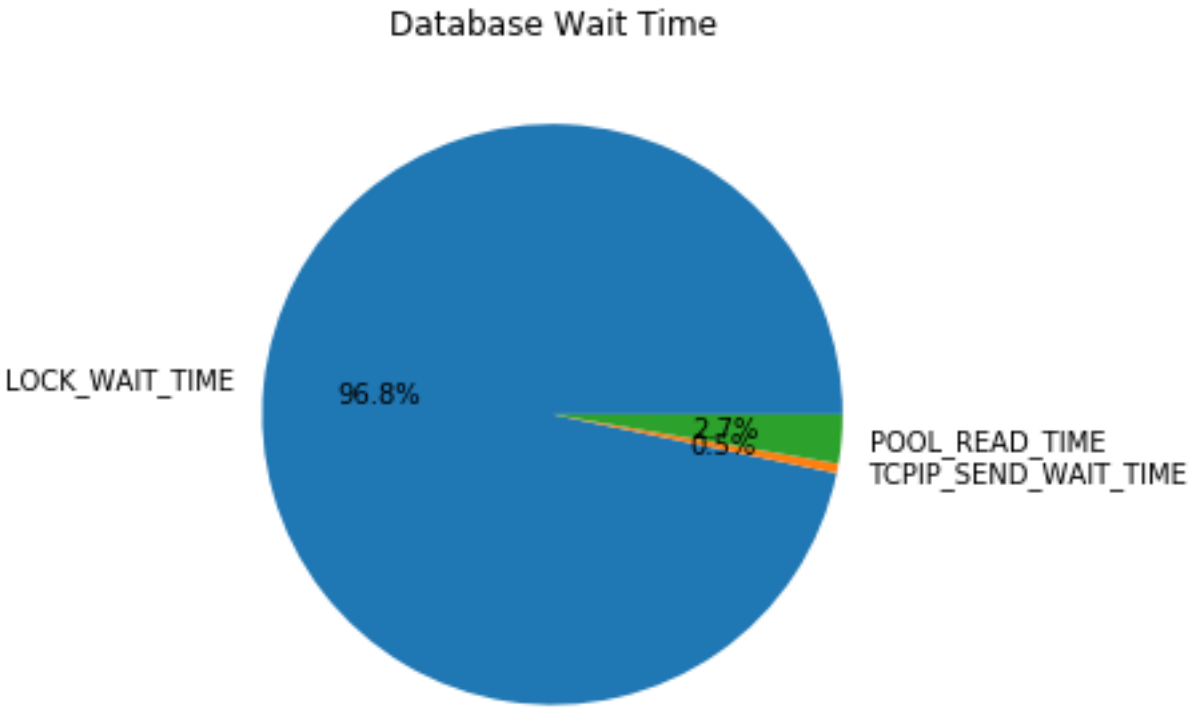

Db2 Documentation

Navigating the IBM Db2 Knowledge Center

IBM Db2 Knowledge Center – Search Box

IBM Knowledge Center

Home > Db2 11.1 >

Next

IBM® Db2 Version 11.1 Knowledge Center

Search in all products

Search in this product...

Table of Contents | Change version or product | Print | PDF | Help | Take a tour

- Db2
- Db2 11.1
- DB2 for Linux UNIX and Windows 10.5.0
- DB2 for Linux UNIX and Windows 10.5.0.4
- DB2 for Linux UNIX and Windows 10.1.0

Db2 11.1

Searching on the K... | ...o PDF | An Overview of the IBM Knowledge Center

Related topics:

- Product overviews
- Database fundamentals
- Database administration
- Developing code for accessing and managing data
- Database reference

Do you want to...

- Open a ticket and download fixes at the **IBM Support Portal**
- Find a technical tutorial in **IBM Developer**
- Find a best practice for integrating technologies in **IBM Redbooks**
- Explore, learn and succeed with training on the **IBM Skills Gateway**

Getting started	Common tasks	Troubleshooting and support	More information
Highlights of Db2® Version 11.1	Install Db2 servers.		Best practices for Db2

Search – Inline Preview

IBM Knowledge Center

Home > Db2 11.1 >

Search create table

Change version

Documentation Videos IBM Developer Technotes Redbooks Take a tour

14,560 results

– CREATE TABLE

Database fundamentals > SQL > Statements >

Db2 11.1

The CREATE TABLE statement defines a table. The definition must include its name and the names and attributes of its columns. The definition can include other attributes of the table, such as its primary key or check constraints.

To create a created temporary table, use the CREATE GLOBAL TEMPORARY TABLE statement. To declare a declared temporary table, use the DECLARE GLOBAL TEMPORARY TABLE statement.

Invocation

+ CREATE GLOBAL TEMPORARY TABLE

Db2 11.1 **CREATE** GLOBAL TEMPORARY **TABLE** statement The **CREATE** GLOBAL TEMPORARY **TABLE** statement **creates** a description of a temporary **table** at the current server. Each session that selects from a **created** temporary **table** retrieves only rows that the same session has inserted. When the session terminates

IBM Db2 Knowledge Center – Version Dropdown

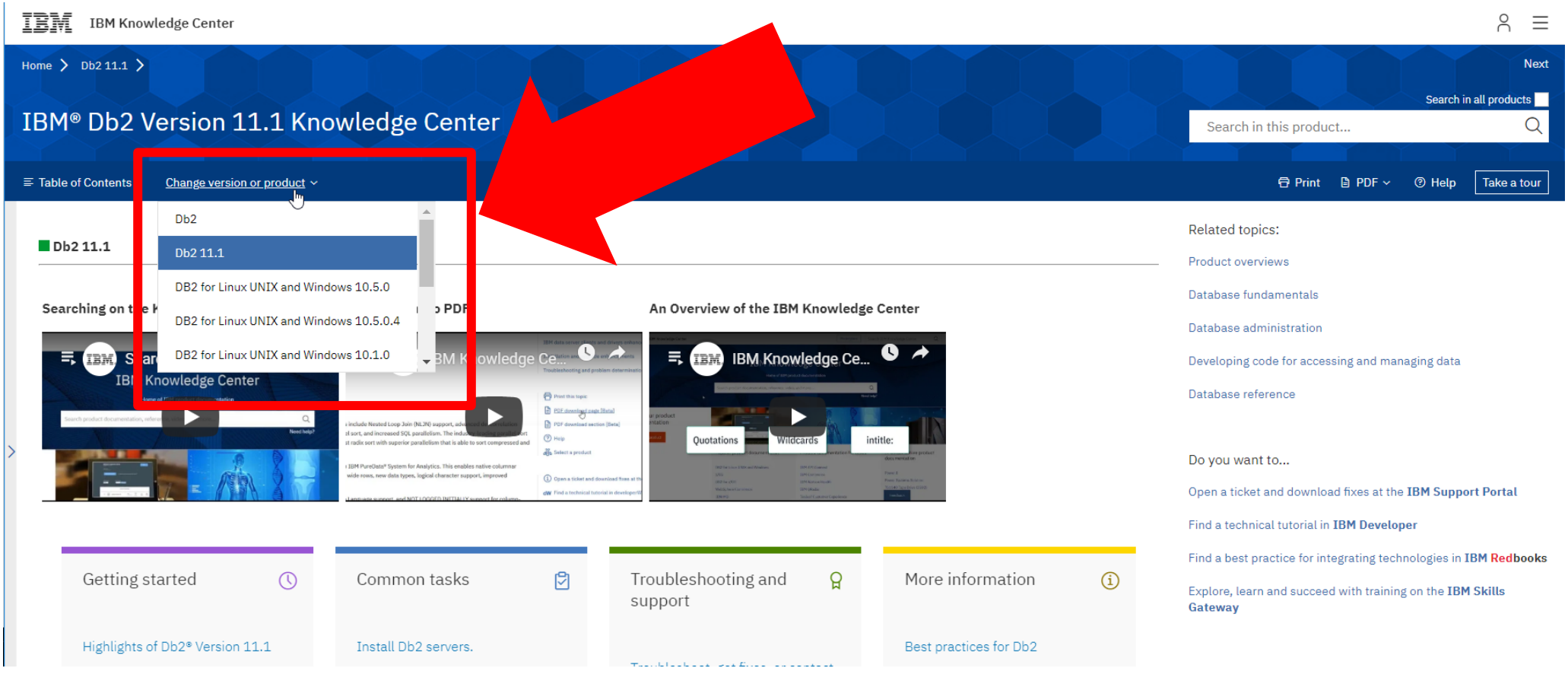

IBM Db2 Knowledge Center – Table of Contents

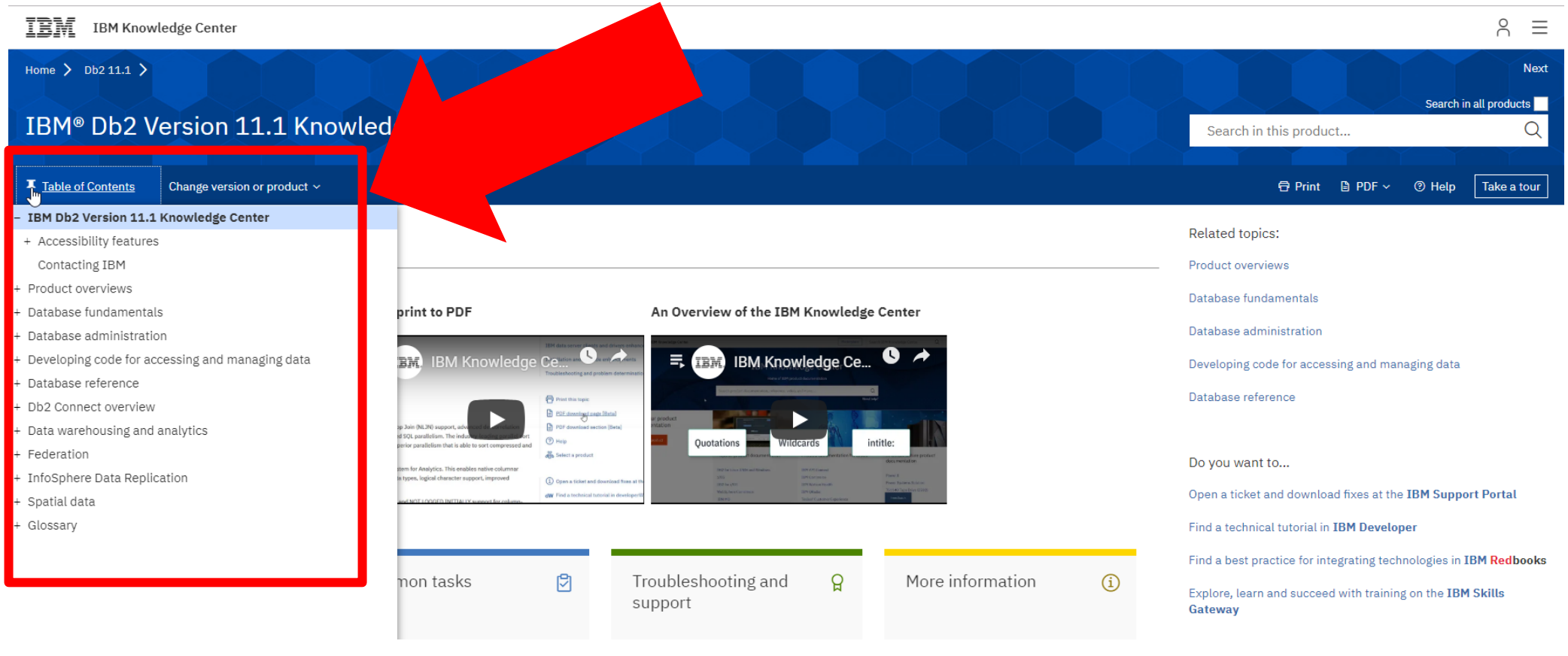

IBM Db2 Knowledge Center – Navigating from the Table of Contents

Command Page

Plain text description of the command

Details about how this command can be executed

What permissions or authorities are needed to run this command

Syntax diagram

Additional tips on the effects of this command and how it might be useful

IBM Knowledge Center | Search in this product...

Db2 11.1

The FLUSH PACKAGE CACHE statement invalidates all cached dynamic SQL statements in the package cache. This invalidation causes the next request for any SQL statement that matches an invalidated cached dynamic SQL statement to be compiled instead of reused from the package cache.

Invocation

This statement can be embedded in an application program or issued by using dynamic SQL statements. It is an executable statement that can be dynamically prepared.

Authorization

The privileges that are held by the authorization ID of the statement must include SQLADM or DBADM authority.

Syntax

```
>>-FLUSH PACKAGE CACHE--DYNAMIC--------------------------------><
```

Notes

- This statement affects all cached dynamic SQL entries in the package cache on all active database partitions.
- As cached dynamic SQL statements are invalidated, the package cache memory that is used for the cached entry is freed if the entry is not in use when the FLUSH PACKAGE CACHE statement runs.

Sample Db2 Syntax Diagram

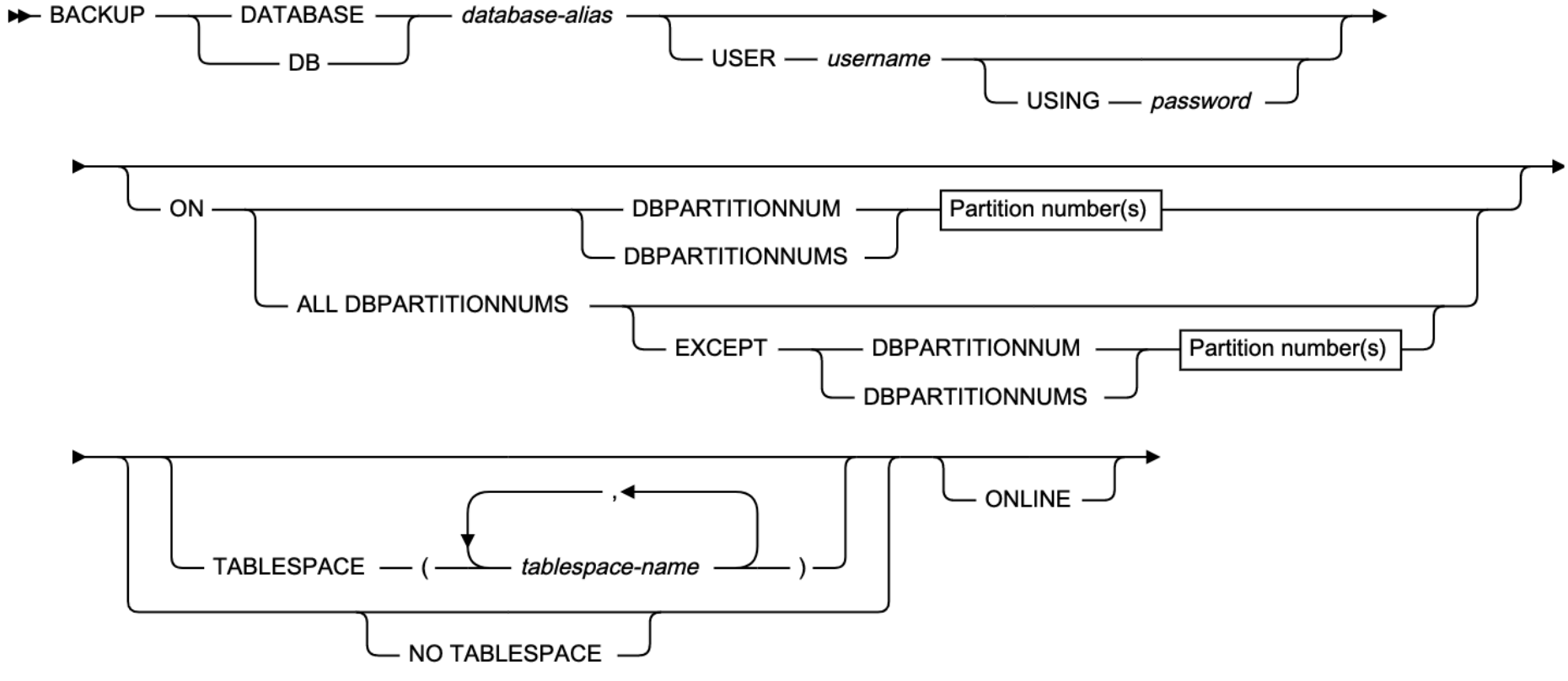

How to Read a Db2 Syntax Diagram (1|4)

- Read the syntax diagrams from left to right and top to bottom, following the path of the line.
- The ►► symbol indicates the beginning of a syntax diagram.
- The → symbol indicates that the syntax is continued on the next line.
- The ►– symbol indicates that the syntax is continued from the previous line.
- The –►◄ symbol indicates the end of a syntax diagram.
- A word or phrase in a box indicates a parameter block.

How to Read a Db2 Syntax Diagram (2|4)

- If you *must* choose one of the items, one item of the stack appears on the main path.

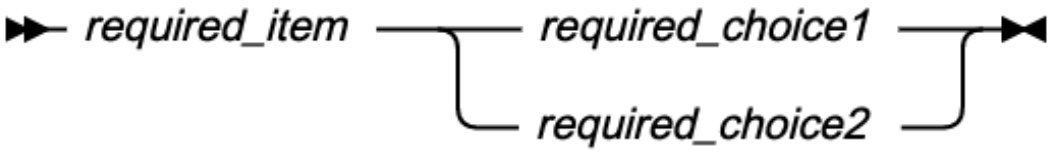

- If one of the items is the default, it will appear above the main path, and the remaining choices will be shown below.

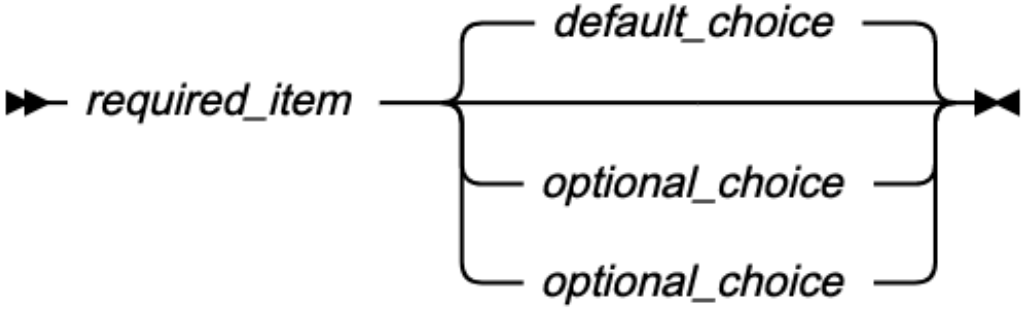

How to Read a Db2 Syntax Diagram (3|4)

- An arrow returning to the left, above the main line, indicates an item that can be repeated. In this case, repeated items must be separated by one or more blanks.

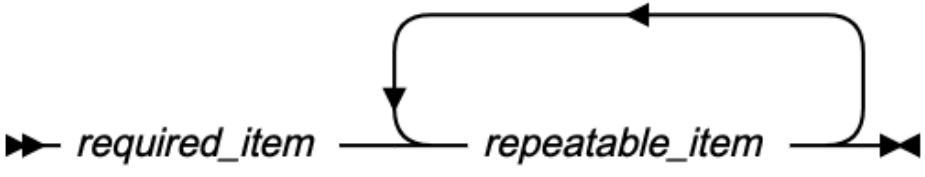

- If the repeat arrow contains a comma, you must separate repeated items with a comma.

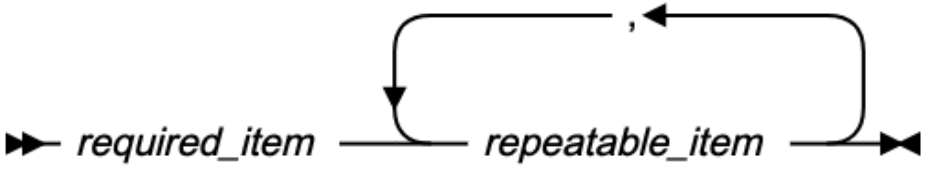

How to Read a Db2 Syntax Diagram (4|4)

- Sometimes a single variable represents a larger fragment of the syntax. For example, in the following diagram, the variable parameter-block represents the whole syntax fragment that is labeled **parameter-block**:

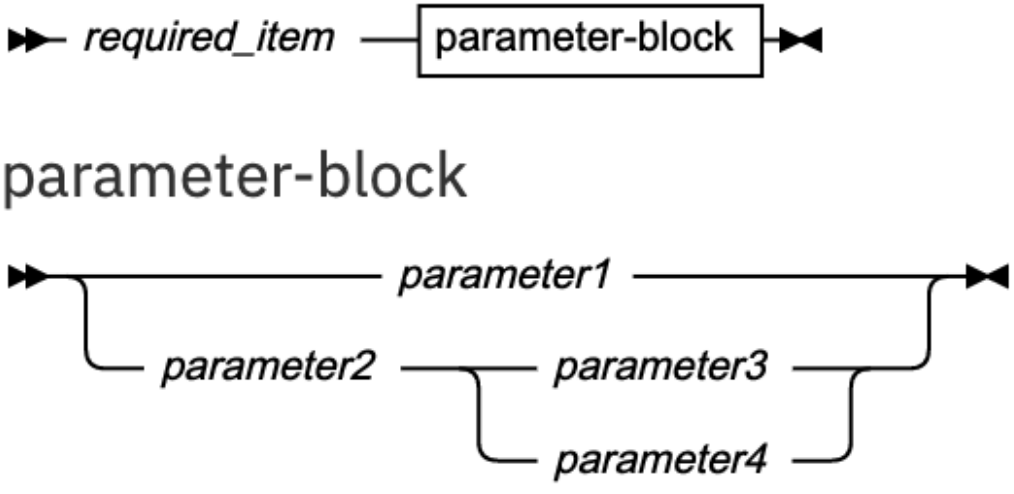

Configuration Parameter

Plain text description of the parameter

Configuration Type

Online or Offline, and Boundary

Default and Range of Possible Values

Units Used

Description of the effects of the parameter

Guidelines and ideas for setting the parameter

Db2 11.1

This parameter specifies the number of seconds that an application will wait to obtain a lock, helping avoid global deadlocks for applications.

Configuration type
Database

Parameter type
- Configurable

Default [range]
-1 [-1; 0 - 32 767]

Unit of measure
Seconds

If you set this parameter to 0, locks are not waited for. In this situation, if no lock is available at the time of the request, the application immediately receives a -911.

If you set this parameter to -1, lock timeout detection is turned off. In this situation a lock will be waited for (if one is not available at the time of the request) until either of the following events occur:

- The lock is granted
- A deadlock occurs.

Note

The value you specify for this configuration parameter is not used to control lock timeouts for event monitor target tables. Event monitors use a separate, non-configurable setting that will cause locks on event monitor tables to time out.

Recommendation: In a transaction processing (OLTP) environment, you can use an initial starting value of 30 seconds. In a query-only environment you could start with a higher value. In both cases, you should use benchmarking techniques to tune this parameter.

The value should be set to quickly detect waits that are occurring because of an abnormal situation, such as a

Useful Knowledge Center Pages

- SQL and XML Limits – How big can X be?
- CREATE TABLE - Data Types and how much space they consume
- Monitor Procedures and Functions – List monitoring data in light-weight impact available via SQL
- SYSCAT.TABLES and SYSCAT.INDEXES – What was that column name again?
- Syntax diagrams for BACKUP, RESTORE, REORG, etc - What order do the clauses go in, again?
- Great starting page if you have the table of contents open

IBM Db2 Knowledge Center Problems

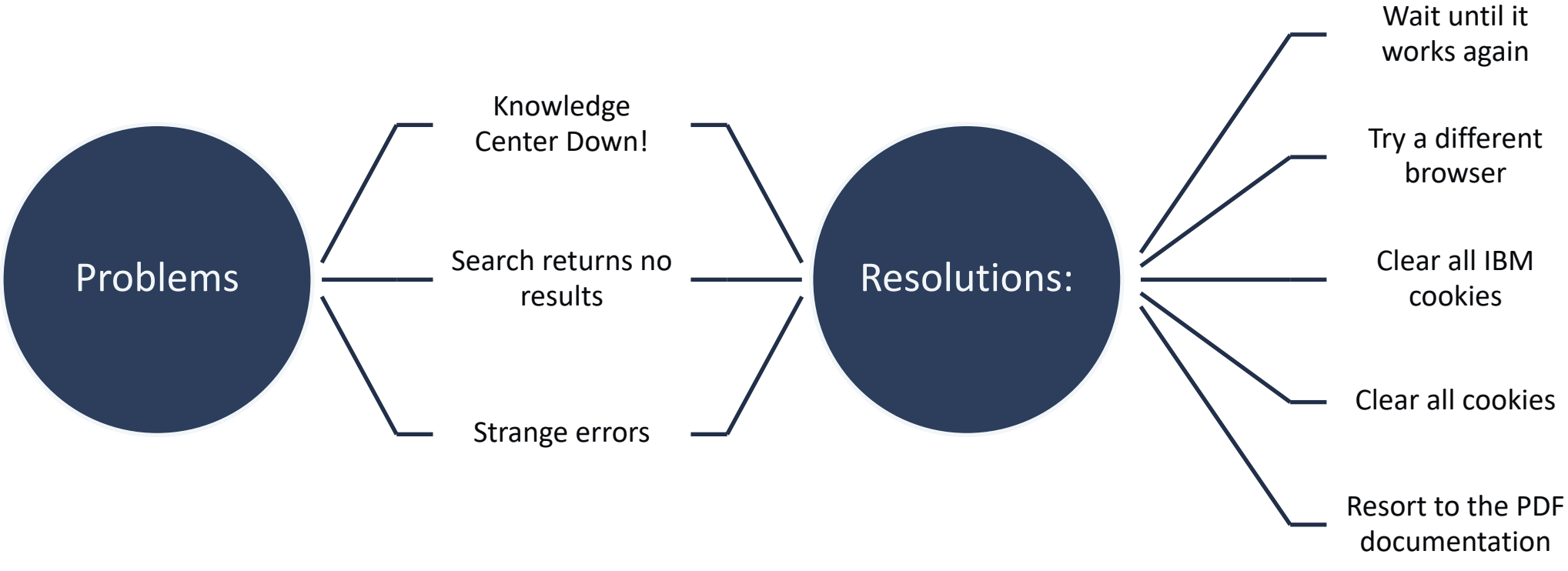

PDF Documentation

- Download before you need it
- Great for when:
  - Internet access is not available
  - Online documentation is down
- https://www.ibm.com/support/pages/node/627743
- Different set of PDFs for each version

English PDF Guide	Link	Date Posted
Db2 Fundamentals		
System Monitor Guide and Reference		August 2020
Database Security Guide		August 2020
Performance Tuning		August 2020
Administration		
Data Movement Utilities Guide and Reference		August 2020
Partition and Clustering Guide		August 2020
Text Search Guide		August 2020
Data Recovery and High Availability Guide and Reference		August 2020
Application Development		
Developing Embedded SQL and XQuery Database Applications		August 2020
SQL Applications		August 2020
SQL Procedural Languages Support		August 2020
Developing Perl, PHP, Python, and Ruby on Rails Applications		August 2020
Reference		
API Reference		August 2020
Built-In Modules Reference		August 2020
Built-In Routines and Views		August 2020
Command Reference		August 2020
Compatibility Features for Oracle		August 2020
Configuration Parameters		August 2020
Developing Routines		August 2020
SQL Reference		August 2020
GSKCapiCmd Users Guide		August 2020

Db2 Error Messages

A Wealth of Information in a Small Package

Important Information in Error Message or SQLCA

Required:

- Error number
- Basic text description of error

+

Optional:

- Object identifiers
  - Names
  - Numbers
- Reason Codes

=

Full Error Message

Error Messages

Three letters, usually SQL, but sometimes others such as DSN or DIA

```
SQL 0911 N
XXX NNNN X
```

Usually 4 digits, sometimes 5

One Character indicating the intensity of the issue. Commonly:

- I – Informational
- W – Warning
- N – Statement Failure
- C – System Failure

- https://www.ibm.com/support/knowledgecenter/en/SSEPGG_10.5.0/com.ibm.db2.luw.messages.doc/doc/c0052007.html

Getting Information on Errors – Command Line (1|2)

```
$ db2 ? SQL0911N

SQL0911N  The current transaction has been rolled back because of a
      deadlock or timeout. Reason code "<reason-code>".

Explanation:

The current unit of work was involved in an unresolved contention for
use of an object and had to be rolled back.

The reason codes are as follows:

2

         The transaction was rolled back due to a deadlock.

68

         The transaction was rolled back due to a lock timeout.

72
…
```

Getting Information on Errors – Command Line (2|2)

```
$ db2 ? SQL0551N


SQL0551N  The statement failed because the authorization ID does not
      have the required authorization or privilege to perform the
      operation. Authorization ID: "<authorization-ID>". Operation:
      "<operation>". Object: "<object-name>".

Explanation:

The operation could not be performed on the specified object. In
general, this message is returned because the authorization ID does not
have the required authority or privilege to perform the operation. In
some cases, it is returned for an object that does not allow the
operation even when the authorization ID has an administrative
authority.

…
```

IBM Knowledge Center: Anatomy of an Error

Error number and generic error text

Plain text description of the error and any reason codes

What to try, sometimes specific to reason codes, and other details

SQL0911N The current transaction has been rolled back because of a deadlock or timeout. Reason code *reason-code*.

Explanation

The current unit of work was involved in an unresolved contention for use of an object and had to be rolled back.

The reason codes are as follows:

2
The transaction was rolled back due to a deadlock.

68
The transaction was rolled back due to a lock timeout.

72
The transaction was rolled back due to a DB2 Data Links Manager error during the transaction.

73
The transaction was rolled back because a queuing threshold such as the CONCURRENTDBCOORDACTIVITIES threshold caused two or more activities to reach a deadlock state.

74
Similar to reason code 73, the transaction was rolled back because two or more activities reached a deadlock state.

75
The transaction was rolled back because two or more applications are deadlocked waiting for a combination of resources governed by workload manager admission control and locks.

76
The transaction was rolled back because two or more applications are deadlocked waiting for resources governed by workload manager admission control.

The application was rolled back to the previous COMMIT.

User response

The changes associated with the unit of work must be entered again.

To help avoid deadlock or lock timeout, issue frequent COMMIT operations, if possible, for a long-running application, or for an application likely to encounter a deadlock.

Db2 Diagnostic Log

The Preeminent Location for Information About System-Level Issues

Where is the Db2 Diagnostic Log?

- The default Linux/UNIX location for the DB2 diagnostic log: $INSTHOME/sqllib/db2dump

- The default Windows (hidden!) location for the DB2 diagnostic log: C:\ProgramData\IBM\DB2\<db2 copy name>\DB2

- To get the path where the DB2 diagnostic log is stored:

```
$ db2 get dbm cfg |grep DIAGPATH
Diagnostic data directory path        (DIAGPATH) = /db2home/db2inst1/sqllib/db2dump
```

OR

```
db2 "select VALUE from SYSIBMADM.DBMCFG where NAME='diagpath’”
```

Db2 Error Log

LEVEL: Info, Warning, Error, Severe

PID: Process ID

INSTANCE: Which instance is affected

MESSAGE: Brief Description of problem

```
PID     : 641                    TID : 139928742651648 PROC : db2ckpwd
INSTANCE: db2inst1               NODE : 000
HOSTNAME: 90664639b1c3
EDUID   : 2                      EDUNAME: db2wdog [db2inst1]
FUNCTION: DB2 UDB, oper system services, sqloSpawnAndWaitForPasswordCheckExe, probe:130
MESSAGE : ZRC=0x800F006A=-2146500502=SQLO_BAD_USER "Bad User"
          DIA8117C Error with userid "".
DATA #1 : signed integer, 4 bytes
2
```

Db2 Error Log

```
db2diag -rc 800F006A
```

```
Input ZRC string '0x800F006A' parsed as 0x800F006A (-2146500502).

ZRC value to map: 0x800F006A (-2146500502)
        V7 Equivalent ZRC value: 0xFFFF866A (-31126)

ZRC class :
        SQL Error, User Error,... (Class Index: 0)
Component:
        SQLO ; oper system services (Component Index: 15)
Reason Code:
        106 (0x006A)

Identifer:
        SQLO_BAD_USER
Identifer (without component):
        SQLZ_RC_BADUSR

Description:
        Bad User

Associated information:
        Sqlcode -30082
SQL30082N  Security processing failed with reason "" ("").

        Number of sqlca tokens : 2
        Diaglog message number: 8117
```

Parsing db2diag.log with the db2diag Tool

- To display all messages in the last hour:
  ```
  db2diag -H 1h
  ```
- To display all error level messages:
  ```
  db2diag -level error
  ```
- To display all error messages containing the DB2 ZRC return code 0x87040055, and the application ID G916625D.NA8C.068149162729:
  ```
  db2diag -g msg:=0x87040055 -l Error | db2diag -gi appid^=G916625D.NA
  ```
- To display all messages logged after the one with timestamp 2017-08-15-00.00.00.000000 inclusively:
  ```
  db2diag -time 2017-08-15-00.00.00.000000
  ```
- To display severe errors logged for the last three days (using slightly different syntax for the level of error:
  ```
  db2diag -gi "level=severe" -H 3d
  ```
- To call db2diag from a Perl script using default settings, enter:
  ```
  system("db2diag -readfile");
  ```

Searching and Formatting using db2diag

```
$ db2diag -e 4500 -fmt %dataobject
DATA #1 :
Package Cache Overflow
memory needed                : 10592
current used size (OSS)      : 134106751
maximum cache size (APM)     : 130191196
maximum logical size (OSS): 134150417
maximum used size (OSS)      : 215154688
owned size (OSS)             : 137101312
number of overflows          : 9400
```

Monitoring Tools

Many Methods to Understand what is Happening

Types of Monitoring

Historical Performance Monitoring

- Why was the database slow at 2 PM on Thursday?
- What trends to we see in performance
- What red flags do we see indicating potential performance problem areas?

Real-Time Monitoring

- What is happening right now?
- Why is the database slow right now?
- What is causing this effect that someone is seeing?

Monitoring to Generate Alerts

- What condition exists that risk imminent outage?

Real-Time Monitoring

db2top
- Old, but tried and true
- Very up-to-date data
- Shows change over time

~~dsmtop~~

dmctop
- New, uses lightweight interfaces
- Must be installed
- Still missing a bit of functionality

db2pd
- Works when nothing else will
- Works when you can't get a connection

MON_GET* functions and views
- Great for scripting
- Uses lightweight interfaces

MONREPORT
- Quick overview
- Defined time frame

GET SNAPSHOT
- Older, heavyweight metrics

SYSIBMADM.SNAP* views
- Older, heavyweight metrics

	Update Info	Use SQL	Lightweight In-Memory Metrics	Remote Access	Reset Metrics	Requires Connection	Deprecated	Oldest Version
db2top	On-screen	N	N	Y	Y	N	Y	<9.1, fp6>
dsmtop	On-screen	N	Y	Y	N	Y	N	10.1
dmctop	On-screen	N	Y	Y	Y	Y	N	11.1
db2pd	-repeat opt	N	Y	N	N	N	N	8.2
MON_GET* Functions	re-run	Y	Y	Y	N	Y	N	9.7+
MONREPORT.DBSUMMARY	re-run	N	Y	Y	N	Y	N	9.7
GET SNAPSHOT	re-run	N	N	N	Y	N	Y	Dawn of Time
SYSIBMADM.SNAP* Views	re-run	Y	N	Y	N	Y	Y	9.7

db2top

```
[/]15:26:36,refresh=2secs(0.002)          Database        Linux,part=[1/1],DB2INST1:WC052D01
[d=Y,a=N,e=N,p=ALL]                                                                  [qp=off]

                    |          25%|          50%|          75%|         100%|
MaxActSess          |             |             |             |             |
SortMemory          |             |             |             |             |
LogUsed             |-            |             |             |             |
FCM BufLow          |             |             |             |             |

Start Date Start Time     Status    Shthres    Buffers     FCMBuf   OtherMem
2009/12/07   16:04:45     Active     195.3M     510.0M     832.0K     102.7M

  Sessions    ActSess   LockUsed LockEscals  Deadlocks   LogReads  LogWrites
        13          0         0%          0          0          0          0

   L_Reads    P_Reads   HitRatio    A_Reads     Writes   A_Writes  Lock Wait
         0          0     0.00%      0.00%          0          0          0

  Sortheap    SortOvf PctSortOvf AvgPRdTime AvgDRdTime AvgPWrTime AvgDWrTime
         0          0     0.00%       0.00       0.00       0.00       0.00

Quit: q, Help: h                svd52db00e.rosetta.com                    db2top 2.0
```

db2top – Help Screen

- Pressing the h key in db2top will get you the help screen, which has a list of all the nifty options

```
[Help]
  d - Database                          l - Sessions
  a - Details for agent <agentid>       t - Tablespaces
  b - Bufferpools                       T - Tables
  D - Dynamic SQL                       U - Locks
  m - Memory pools                      s - Statements
  u - Utilities                         p - Members
  A - HADR                              F - Federation
  B - Bottlenecks                       J - Skew detection
  C - Toggle collector on/off           W - Watch user/agent
  / - Set regexp                        g - Toggle gauge on/off
  i - Toggle idle objects on/off        G - Toggle local/global snapshot
  P - Select member                     X - Toggle extended mode on/off
  k - Toggle actual/delta values        z - Descending sort
  Z - Ascending sort                    + - Longer default sort
  - - Shorter default sort              I - Set new snapshot interval
  R - Reset snapshot monitor            S - Run native DB2 snapshot
  > - Move right                        < - Move left
  c - Change columns order              f - Freeze display
  ! - Goto to system prompt             V - Set default explain schema
  O - Display settings                  w - Write parms to .db2toprc
  h - Help                              q - Quit

DB2 Interactive Snapshot Monitor V2.0
Licensed Materials - Property of IBM
Copyright IBM Corp. 2005, 2006 All Rights Reserved.
```

db2top – Interval and Cumulative

- Default interval is 2 seconds
- A different interval can be specified with the –i option when db2top is started
- db2top only reports the data for the last <interval> seconds (current view)
- db2top can also report cumulative values since the last db restart or reset (cumulative view)
- Pressing k will toggle between the current view and the cumulative view
- Pressing R will reset the monitor data – for that session only

db2top – Lock Chaining

- Use U to get to the lock screen:

```
[ ]02:00:22,refresh=2secs(0.001)                    Locks                    AIX,member=[1/1],
[d=Y,a=Y,e=N,p=ALL]                                                                  Cpu=0(usr+sys),[qp=off]

        Locks held.......:        5 [0.00]
        Agents waiting...:        0
        Appls Connected..:       13

Agent       Application        Application                    Object                                Lock    Object     Lock       Lock
Id(State)   Name               Status                         Name                                  Mode    Type       Status     Count
----------- ------------------ ------------------------------ ------------------------------------- ------- ---------- ---------- -------
      12(c) db2fw0             Connected                      DBA.ROS_LOCKS                         IX      Table      Granted          1
      13(c) db2fw1             Connected                      DBA.ROS_LOCKS                         IX      Table      Granted          1
      14(c) db2fw2             Connected                      DBA.ROS_LOCKS                         IX      Table      Granted          1
      15(c) db2fw3             Connected                      DBA.ROS_LOCKS                         IX      Table      Granted          1
    8703(i) db2jcc_application UOW Waiting in the application Internal Plan                         S       Plan       Granted          1

Quit: q, Help: h                    Lock=5 (Entries=5), L: Lock Chain                                                db2top 2.0
```

db2top – Lock Chaining

- If locks are waiting, db2top can quickly tell which connection is waiting on which connection

```
[-]20:31:03,refresh=1secs(0.001)                    Locks                    Inactive,member=[1/1],DB2INST1:sample
[d=Y,a=N,e=N,p=ALL]                                                                                          [qp=off]

  Blocker->Blocked Agent Chain
  ----------------------------------------------------------------------------------------------------------
  38->40
  38->46
```

db2top - Scrolling

- Scrolling up and down is not possible
- Many screens have more columns that will fit on the screen
- Left and right scrolling can be done with > and <

dmctop

- Brand new as of Summer 2020
  - Will be included in the product eventually
- Easy to install by downloading a file
- Can connect remotely, with or without TLS/SSL
- Does not yet have full feature parity with db2top
- Already better than dsmtop
- Not available on AIX/UNIX

dmctop

- Start with `dmctop -d dbname`
- CPU usage not always accurate
- Read efficiency!
- db2top shortcuts work when the Menu pane is active

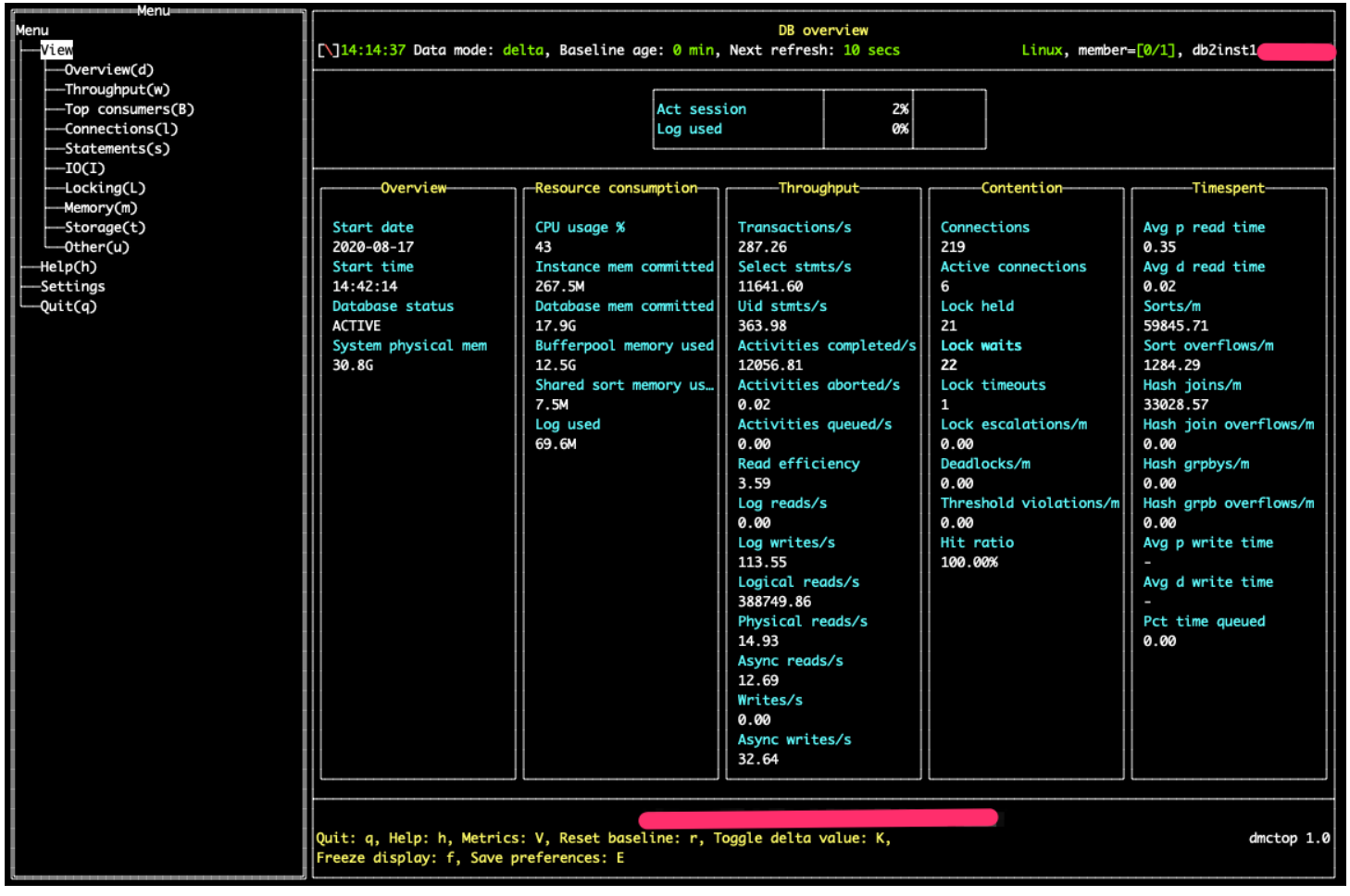

dmctop Time Modes

- Delta
  - Refreshes every 10 seconds by default
  - Values are
    - Since dmctop was started
    - Since that dmctop screen was first used
    - Since baseline was reset
  - Some values per minute or per second
- Actual
  - Refreshes every 10 seconds by default
  - Values are always since database restart, even if you reset baseline

dmctop: Time Spent

```
Menu
Menu
├─View
│  ├─Overview(d)
│  ├─Throughput(w)
│  │  ├─Workloads(w)
│  │  ├─Workload assignment(W)
│  │  ├─Service classes(C)
│  │  ├─Members(p)
│  │  ├─Skew monitor(J)
│  │  └─Time spent(Sys)(Q)
│  ├─Top consumers(B)
│  ├─Connections(l)
│  ├─Statements(s)
│  ├─IO(I)
│  ├─Locking(L)
│  ├─Memory(m)
│  ├─Storage(t)
│  └─Other(u)
├─Help(h)
├─Settings
└─Quit(q)
```

Throughput - Time spent (system)

[\]15:16:47 Data mode: delta, Baseline age: 0 min, Next refresh: 3 secs Linux, member=[0/1],

Time spent element	Level 1	Level 2	Level 3	Level 4	Milliseconds
Client idle wait time	99.39%	-	-	-	12866955
Total request time	0.61%	-	-	-	78756
Total wait time	-	3.88%	-	-	3057
Agent wait time	-	-	0.00%	-	0
Workload manager total queue time	-	-	0.00%	-	0
Time waited on locks	-	-	0.02%	-	12
Lock wait time global	-	-	-	0.00%	0
Others	-	-	-	0.02%	12
Log buffer wait time	-	-	0.00%	-	0
Log disk wait time	-	-	0.64%	-	504
Tcp/ip received wait time	-	-	0.22%	-	172
Tcp/ip send wait time	-	-	1.22%	-	960
Interprocess communication received wait time	-	-	0.00%	-	0
Interprocess communication send wait time	-	-	0.00%	-	0
Audit subsystem wait time	-	-	0.00%	-	0
Audit file write wait time	-	-	0.00%	-	0
Diagnostic log file write wait time	-	-	0.00%	-	0
Total buffer pool physical read time	-	-	0.23%	-	179
Total buffer pool physical write time	-	-	0.00%	-	0
Direct read time	-	-	0.33%	-	263
Direct write time	-	-	0.00%	-	2
Event monitor wait time	-	-	0.00%	-	0
Total extended latch wait time	-	-	1.03%	-	808
Time waited for prefetch	-	-	0.00%	-	1
Communication exit wait time	-	-	0.00%	-	0
Time spent waiting to send data	-	-	0.00%	-	0
Time spent waiting to receive data	-	-	0.00%	-	0
Cluster caching facility wait time	-	-	0.00%	-	0
Reclaim wait time	-	-	0.00%	-	0
Space map page reclaim wait time	-	-	0.00%	-	0
External table receive wait time	-	-	0.00%	-	0
External table send wait time	-	-	0.00%	-	0
Total compile processing time	-	11.78%	-	-	9279
Total synchronous runstats processing time	-	-	0.00%	-	0
Total statistics fabrication processing time	-	-	0.00%	-	0
Others	-	-	11.78%	-	9279
Total implicit compile processing time	-	2.31%	-	-	1823
Total routine user code processing time	-	0.68%	-	-	533
Total section processing time	-	71.75%	-	-	56508
Total section sort processing time	-	-	3.95%	-	3107
Total column-organized processing time	-	-	0.00%	-	0
Others	-	-	67.80%	-	53400
Total commits processing time	-	2.28%	-	-	1798
Total rollback processing time	-	0.01%	-	-	4
Total runtime statistics processing time	-	0.00%	-	-	0
Total reorganization processing time	-	0.00%	-	-	0
Total load processing time	-	0.00%	-	-	0
Total non-wait time for online backups	-	0.00%	-	-	0
Total non-wait time creating / re-creating indexes	-	0.05%	-	-	42
Total connection or switch user processing time	-	0.42%	-	-	332
Total connection authentication processing time	-	-	0.42%	-	331
Others	-	-	0.00%	-	1

Menu: Esc, Export: e, Member number: m dmctop 1.0

db2pd – a Few Useful Options

- mempools
- memsets
- osinfo
- wlocks
- repeat
- bufferpools
- hadr

MONREPORT.DBSUMMARY

- Good summary of data
- Snapshot-like format that uses more recent monitoring infrastructure
- Snipets…

```
Part 1 - System performance

 Work volume and throughput
  ------------------------------------------------------------------------------
                                    Per second              Total
                                    ----------------------  ------------------------
  TOTAL_APP_COMMITS                 0                       3
  ACT_COMPLETED_TOTAL               1                       11
  APP_RQSTS_COMPLETED_TOTAL         2                       27

  TOTAL_CPU_TIME                    = 44364
  TOTAL_CPU_TIME per request        = 1643

  Row processing
    ROWS_READ/ROWS_RETURNED         = 2 (33/16)
    ROWS_MODIFIED                   = 0
```

MONREPORT.DBSUMMARY Snippets

```
Buffer pool
  -----------------------------------------------------
  Buffer pool hit ratios

  Type              Ratio             Formula
  ---------------   ---------------   --------------------
  Data              100               (1-(0+0-0)/(37+0))
  Index             100               (1-(0+0-0)/(34+0))
  XDA               0                 (1-(0+0-0)/(0+0))
  COL               0                 (1-(0+0-0)/(0+0))
  LBP Data          100               (37-0)/(37+0)
  LBP Index         0                 (0-0)/(34+0)
  LBP XDA           0                 (0-0)/(0+0)
  LBP COL           0                 (0-0)/(0+0)
  GBP Data          0                 (0 - 0)/0
  GBP Index         0                 (0 - 0)/0
  GBP XDA           0                 (0 - 0)/0
  GBP COL           0                 (0 - 0)/0
```

MONREPORT.DBSUMMARY Snippets

```
                          Per activity                    Total
                          ------------------------------  ----------------------
LOCK_WAIT_TIME            0                               0
LOCK_WAITS                0                               0
LOCK_TIMEOUTS             0                               0
DEADLOCKS                 0                               0
LOCK_ESCALS               0                               0

<SNIP>

Sort
--------------------------------------------------------------------------------
TOTAL_SORTS                           = 4
SORT_OVERFLOWS                        = 0
POST_THRESHOLD_SORTS                  = 0
POST_SHRTHRESHOLD_SORTS               = 0
```

MON_GET* Functions and Views

- MON_GET_CONNECTION and MON_GET_CONNECTION_DETAILS
- MON_GET_SERVICE_SUBCLASS and MON_GET_SERVICE_SUBCLASS_DETAILS
- MON_GET_UNIT_OF_WORK and MON_GET_UNIT_OF_WORK_DETAILS
- MON_GET_WORKLOAD and MON_GET_WORKLOAD_DETAILS
- MON_GET_DATABASE and MON_GET_DATABASE_DETAILS
- MON_GET_APPL_LOCKWAIT
- MON_GET_BUFFERPOOL
- MON_GET_CONTAINER
- MON_GET_EXTENDED_LATCH_WAIT
- MON_GET_INDEX
- MON_GET_LOCKS
- MON_GET_PAGE_ACCESS_INFO
- MON_GET_TABLE
- MON_GET_TABLESPACE
- MON_GET_FCM_CONNECTION_LIST
- MON_GET_HADR
- MON_GET_SERVERLIST
- MON_GET_TRANSACTION_LOG
- MON_GET_ROUTINE
- MON_GET_AGENT
- MON_GET_INDEX_USAGE_LIST
- MON_GET_TABLE_USAGE_LIST
- MON_GET_PKG_CACHE_STMT and MON_GET_PKG_CACHE_STMT_DETAILS
- MON_GET_AUTO_MAINT_QUEUE
- MON_GET_AUTO_RUNSTATS_QUEUE
- MON_GET_EXTENT_MOVEMENT_STATUS
- MON_GET_REBALANCE_STATUS
- MON_GET_RTS_RQST
- MON_FORMAT_XML_COMPONENT_TIMES_BY_ROW
- MON_FORMAT_XML_METRICS_BY_ROW
- MON_FORMAT_XML_TIMES_BY_ROW
- MON_FORMAT_XML_WAIT_TIMES_BY_ROW

Querying MON_GET* Table Functions

```
select * from table(mon_get_database(-2))
```

Can specify specific columns

Name of the table function

Member is usually one of the parameters

- Variable number of parameters depending on the object
- For example, mon_get_table requires tabschema and tabname
- Can use ‘’ or NULL for many of the parameters to return data on all objects

Interacting with IBM Support

- Open a ticket via the support portal or phone
- Front-line support reps are sometimes good, but sometimes do not seem to know much about Db2.
- IBM will ask for additional information. Respond quickly.
- Usually, you must push IBM to keep working on an issue by updating the ticket regularly
- If a ticket is not getting needed attention, escalate to a duty manager (call in and ask for this)
- If you did not get reasonable answers or responses, close a ticket as “non-sat” – this gets attention, but often no further action.

Ember's Foundations for Troubleshooting

- Don't point fingers
- Assume that the problem is within your control
- Help others by finding clues
- Look in the common places first
- Ask extensive questions
- Ask for help

IDUG

Leading the Db2 User Community since 1988

Ember Crooks

ember.crooks@gmail.com

#IDUGDb2